EVH-1152D/94

Electro-Voice

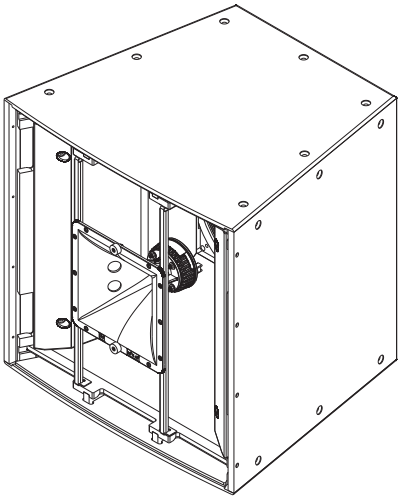

- Rotatable Mid-bass and High Frequency Waveguides for consistent pattern control down to 500 Hz
- Integrated Passive Network with PTP High Frequency Protection
- PI and FG versions available with gland nut and stainless-steel grille rated IEC 60529 IP55
- Integrates easily with EVF Low Frequency and Subwoofer Systems
- EN54-24 type B certification 1438/CPR/0299 with CDG cover installed **(Only available in select regions)**

The Electro-Voice EVH-1152D/94 is a high-power, two-way horn-loaded coaxial loudspeaker system that can be used in a wide variety of applications where excellent intelligibility, wide bandwidth directivity control, and high efficiency are required in a compact, cost-effective package.
For high frequencies, the EVH-1152D/94 utilizes the DH7N, a high-output 3-inch titanium compression driver, coupled to a rotatable Constant Directivity 90° x 40° waveguide. Both the mid-bass and high frequency waveguides may be rotated to maintain uniform pattern control over the entire critical vocal range regardless of enclosure orientation. For low frequencies, the SMX2151 15-inch woofer was developed using FEA optimization for motor, suspension, and electrical design to ensure very low distortion, high efficiency, and maximum intelligibility at high SPL. The crossover uses steep, 24-dB per-octave slopes with equalization for very smooth response in the vocal range, linear off-axis response, and an HF protection circuit for long-term reliability. This combination of technologies results in extended frequency response and excellent pattern control down to 500 Hz.
The EVH-1152D/94 features make it ideal for many fixed-install applications. The trapezoidal enclosure is constructed out of weather-resistant birch and coated with EVCoat for enhanced durability. For protection against outdoor elements, weatherized versions are available (PI and FG). The enclosure is built with 28 M10 suspension points for single hang (four (4) shoulder eyebolts included) or cluster arrays (optional HRK or VRK kits).
The innovative input panel provides Phoenix-style connectors (included in all models) and a dual gland nut cover plate (CDG included in PI and FG models). For convenience in temporary installation you may add a dual NL4 type connector cover plate (CDNL4). An external easy to access jumper card is provided with each loudspeaker to assist you in the selection of passive (standard shipping configuration) or biamp operation. An available 70.7/100 Volt internal transformer kit (TK-150) may be easily mounted to the input panel for use in distributed systems.
No matter what the application and budget, all these features provide you with the tools to increase flexibility during system design to meet and support your customer's requirements with fewer items in inventory.
EVF and EVH loudspeakers feature precise acoustics and rigging design for easy to configure vertical and horizontal clusters as part of the solutions provided in the EV innovation family.

Technical specifications

Frequency Response (-3 dB):	60 Hz–17 kHz[1]		
Frequency Range (-10 dB):	50 Hz–20 kHz[1]		
Rotatable Coverage:	90° x 40°		
Rec. High-Pass Frequency:	60 Hz		
Passive Crossover Frequency:	1300 Hz		
Axial Sensitivity:	105 dB (1 W/1 m)[1]		
Max. Calculated SPL:	138 dB[1]		
Passive Power Handling:	500 W Continuous, 2000 W Peak[2]		
Impedance:	8 Ω (nominal), 6.0 Ω (min.)		
Transformer: Standard 50 Hz BW24 High Pass	**70 V**	**100 V**	**Z nom**
	37.5 W	75 W	130 Ω
	75 W	150 W	65 Ω
	150 W	Do Not Use	33 Ω
Transformer: 89 Hz High Pass per EN54-24 Spectrum	**70 V**	**100 V**	**Z nom**
	50 W	100 W	100 Ω
	100 W	200 W	50 Ω
	200 W	400 W	25 Ω
LF Transducer - SMX2151, 15 in (381 mm) driver			
LF Axial Sensitivity:	106 dB (1 W/1 m)[4]		
LF Max. Calculated SPL:	138 dB		
LF Power Handling:	400 W Continuous, 1600 W Peak[3]		
LF Impedance:	8 Ω (nominal), 6.1 Ω (min.)		
HF Transducer - DH7N, 3 in (76 mm) diaphragm compression driver			
HF Axial Sensitivity:	112 dB (1 W/1 m)[4]		
HF Max. Calculated SPL:	137 dB		
HF Power Handling:	75 W Continuous, 300 W Peak[3]		
HF Impedance:	8 Ω (nominal), 6.0 Ω (min.)		
Connectors:	Dual four-pin 10 AWG Phoenix/ Euro Block screw-terminals	PI/FG Versions: CDG dual-gland-nut input panel cover included	
Enclosure:	13-ply weather-resistant birch with EVCoat	FG Version: 13-ply weather-resistant birch with fiberglass finish	
Grille:	16 GA powder-coated galvanneal with rotatable logo	PI/FG Versions: Stainless steel with hydrophobic cloth	
Environmental:	IEC 60529 IP55 for PI and FG versions		
Suspension:	(28) M10 threaded suspension points		
Dimensions (H x W x D):	30.26 in x 30.26 in x 26.77 in (768.6 mm x 768.6 mm x 680.1 mm)		
Net Weight:	145.5 lb (66.1 kg)		
Shipping Weight:	160.5 lb (72.9 kg)		

1. Half-space measurement.
2. EIA RS-426A, tested for eight hours.
3. AES 2-1984, tested for eight hours.
4. Arithmetic averages, 300–1,300 Hz (LF) and 1,300–5,000 Hz (HF).

System overview

Block Diagram (Biamp):

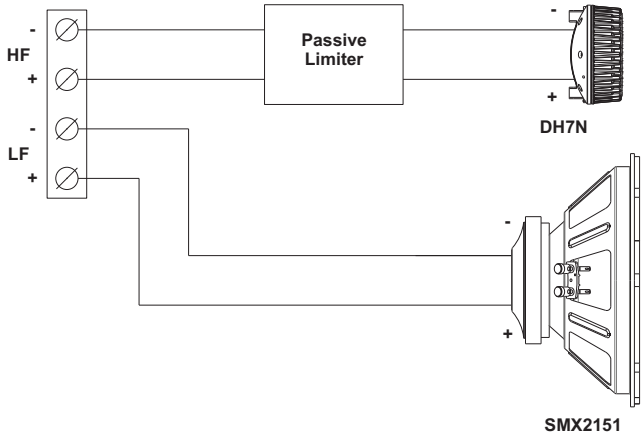

Block Diagram (Passive):
Standard shipping configuration

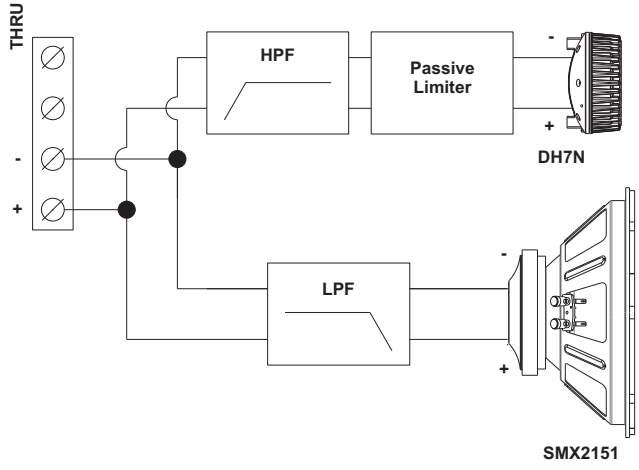

Frequency Response and Impedance:

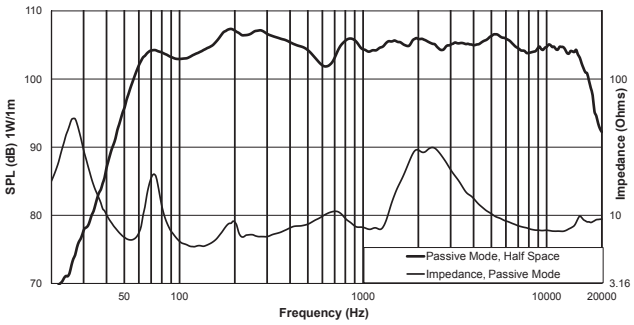

Horizontal Off-Axis Frequency Response:

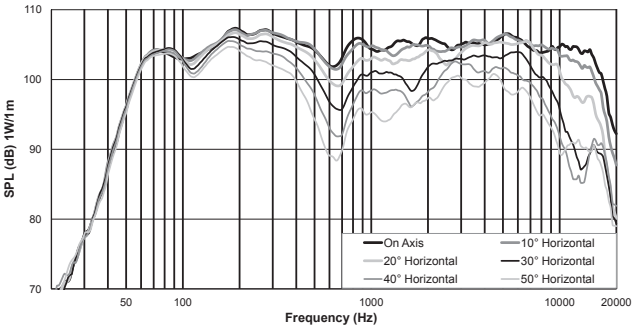

Vertical Off-Axis Frequency Response:

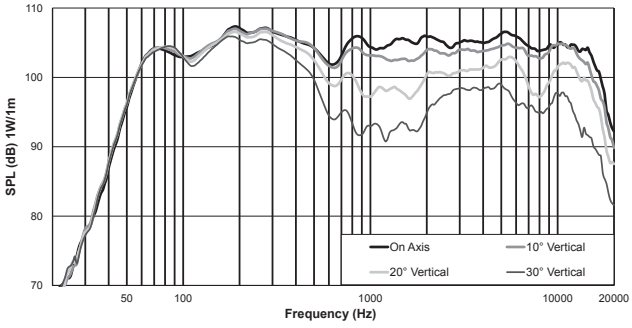

Caution!

This Electro-Voice loudspeaker should be suspended overhead only in accordance with the procedures and limitations specified in the User's Manual and possible manual update notices. This system should be suspended with certified rigging hardware by an authorized rigging professional and in compliance with local, state, and federal overhead suspension ordinances.

Beamwidth (Active):

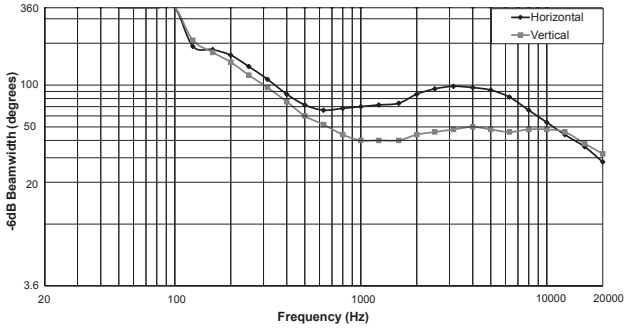

Directivity (Active):

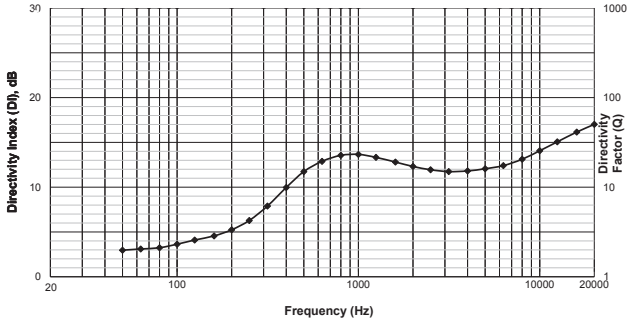

Notice!

Using EVH-1152D v.1.1 DSP standard IIR settings for the Beamwidth, Directivity and Polar Response.

Compatible System Solutions:

EVH-1152D/43	40° x 30° Coverage
EVH-1152D/64	60° x 40° Coverage
EVH-1152D/66	60° x 60° Coverage
EVH-1152D/96	90° x 60° Coverage
EVH-1152D/99	90° x 90° Coverage
EVF-2151D	Dual 15 inch Bass Element
EVF-1181S	Single 18 inch Bass Element
DX46	Dx46 Loudspeaker Controller[5]
N8000	N8000 Digital Matrix Controller[5]
CPS2.9	CPS 2.9 Power Amplifier[5]
CPS2.12	CPS 2.12 Power Amplifier[5]
CPS4.10	CPS 4.10 Power Amplifier[5]

5. Contact your sales representative for voltage information.

Horizontal and Vertical Polar Response (Active):
Polar plots (1/3 octave)

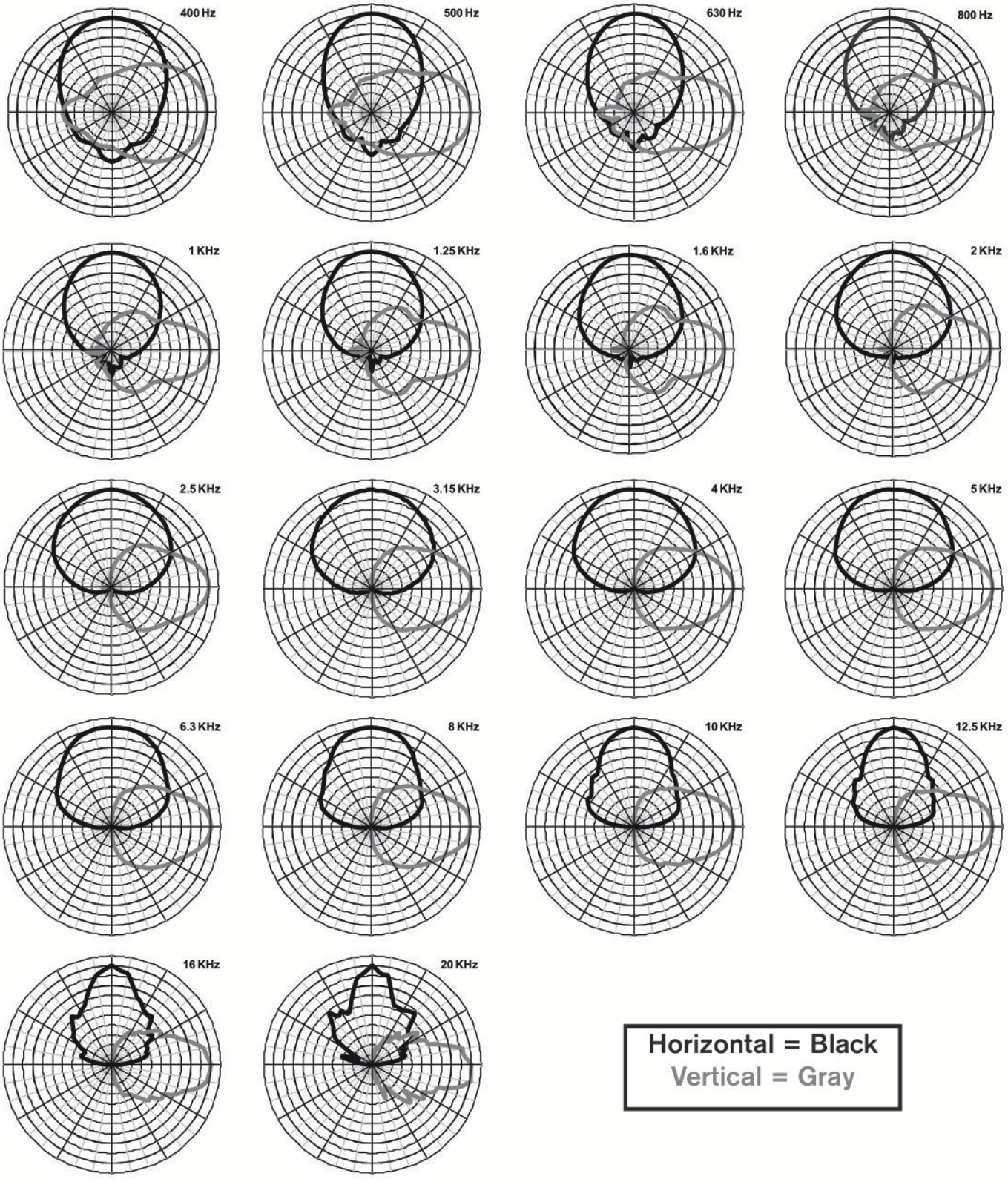

Dimension Drawing:

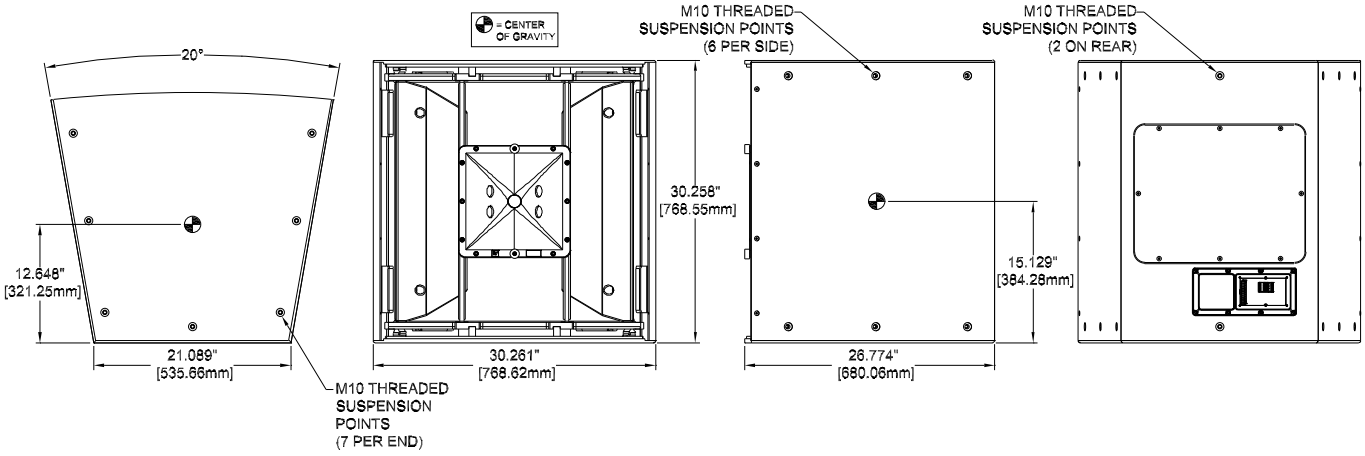

Notice!
Acoustic measurement reference axis is the center of the grille.

Certifications and approvals

CE 1438
Sachsenring 60, 94315 Straubing, Germany 1438-CPR-0299 Year of affixing the CE-Mark: 2013
EN 54-24:2008 Voice alarm Loudspeakers for fire detection and fire alarm systems for buildings Loudspeakers type: EVH-1152D/43, EVH-1152D/64, EVH-1152D/66, EVH-1152D/94, EVH-1152D/96, EVH-1152D/99 (BLK, WHT, PIB, PIW)

EN54-24 type B certification 1438/CPR/0299 with CDG cover installed **(Only available in select regions).**

Ordering information

EVH-1152D/94-BLK
15" / 2-way Full-range Systems; SMX woofer & DH7N driver - 500 W cont.; 90° x 40°, EVCoat, black
Order number **EVH1152D94BLB**

EVH-1152D/94-WHT
15" / 2-way Full-range Systems; SMX woofer & ND2B driver or DH7N driver - 500 W cont.; 90° x 40°, EVCoat, white
Order number **EVH1152D94WLB**

EVH-1152D/94-PIB
15" / 2-way Full-range Systems; SMX woofer & DH7N driver - 500 W cont.; 90° x 40°, EVCoat, PI-weatherized, black
Order number **EVH1152D94PBLB**

EVH-1152D/94-PIW
15" / 2-way Full-range Systems; SMX woofer & DH7N driver - 500 W cont.; 90° x 40°, EVCoat, PI-weatherized, white
Order number **EVH1152D94PWLB**

EVH-1152D/94-FGB
15" / 2-way Full-range Systems; SMX woofer & DH7N driver - 500 W cont.; 90° x 40°, EVCoat, fiberglass, black
Order number **EVH1152D94-FBLB**

EVH-1152D/94-FGW
15" / 2-way Full-range Systems; SMX woofer & DH7N driver - 500 W cont.; 90° x 40°, EVCoat, fiberglass, white SMX/DH7N
Order number **EVH1152D94-FWLB**

EVH-1152D/94-BLK
15" / 2-way Full-range Systems; SMX woofer & DH7N driver - 500 W cont.; 90° x 40°, EVCoat, black — EN54-24 certified
Order number **EVH-1152D/94-BLKE**

EVH-1152D/94-WHT
15" / 2-way Full-range Systems; SMX woofer & DH7N driver - 500 W cont.; 90° x 40°, EVCoat, white — EN54-24 certified
Order number **EVH-1152D/94-WHTE**

EVH-1152D/94-PIB
15" / 2-way Full-range Systems; SMX woofer & DH7N driver - 500 W cont.; 90° x 40°, EVCoat, PI-weatherized, black — EN54-24 certified
Order number **EVH-1152D/94-PIBE**

EVH-1152D/94-PIW
15" / 2-way Full-range Systems; SMX woofer & DH7N driver - 500 W cont.; 90° x 40°, EVCoat, PI-weatherized, white — EN54-24 certified
Order number **EVH-1152D/94-PIWE**

Accessories

CSG
Single gland nut cover kit for EVA, EVF & EVH
Order number **CSG-LB**

CDG
Dual gland nut cover kit for EVA, EVF & EVH
Order number **CDG-LB**

CDNL4
Dual NL4 cover kit for EVA, EVF & EVH
Order number **CDNL4-LB**

TK-150
Transformer kit for EVF & EVH, 150W / 70V
Order number **TK-150**

HRK-2B
Horizontal rigging kit for EVF & EVH full-range to EVF sub, black
Order number **HRK-2B-LB**

HRK-2W
Horizontal rigging kit for EVF & EVH full-range to EVF sub, white
Order number **HRK-2W-LB**

HRK-3B
Horizontal rigging kit for EVH, black
Order number **HRK-3B-LB**

HRK-3W
Horizontal rigging kit for EVH, white
Order number **HRK-3W-LB**

VRK-2B
Vertical rigging kit for EVF & EVH full-range to EVF subs, black
Order number **VRK-2B-LB**

VRK-2W
Vertical rigging kit for EVF & EVH full-range to EVF subs, white
Order number **VRK-2W-LB**

VRK-3B
Vertical rigging kit for EVH, black
Order number **VRK-3B-LB**

VRK-3W
Vertical rigging kit for EVH, white
Order number **VRK-3W-LB**

Represented by:

Germany:
Bosch Sicherheitssysteme GmbH
Robert-Bosch-Ring 5
85630 Grasbrunn
Germany

Bosch Security Systems, Inc.
12000 Portland Avenue South
Burnsville MN 55337
USA

www.electrovoice.com

© Bosch Security Systems 2014 | Data subject to change without notice
Document Number F.01U.196.273 | Vs05 | 19. Dec 2014