EVA-2082S/906

Dual 8” Two-Way 90° x 6° Full-Range Dual Element Line Array Module

Key Features:

- True Line Array Performance
- 90° Horizontal Coverage Pattern
- 6° Vertical Coverage Pattern
- 104 dB Sensitivity
- Hidden Suspension Hardware (Included) is Architecturally Pleasing
- 3 Finishes Available - Indoor, PI, and Fiberglass
- EVADA (EVA Design Assistant) Software Tool
- Single Amplifier Channel Drive Configuration for Entire Array
- Advanced 6th Order Crossover Network with HF Protection

General Description:

The Electro-Voice EVA Series (Expandable Vertical Array) is designed to provide full bandwidth, well defined coverage from easily created line arrays using four different preconfigured 2-way modules. Two vertical coverage angles, 6° and 20°, can be combined to create line arrays optimized for spaces ranging from 12m (40ft) to greater than 60m (200ft) deep. Two horizontal coverage angles, 90° and 120°, provide the perfect match for any width. Each module consists of two elements, each 2-way element containing an 8” woofer and two compression drivers mounted on a hydra/waveguide combination. High order passive networks couple the element’s transducers, and the array element to additional elements to provide plane wave radiation and response equal to DSP-driven high end systems. Impedance management allows full array drive (up to 4 modules) from a single amplifier channel at 4 ohms. Matching subwoofer module is available when response below 50 Hz is required. EVA systems can be used in a variety of fixed installation applications where high quality sound reinforcement and even coverage are required from a compact , lightweight, unobtrusive array.

EVA-2082 modules utilize four DH2005 high output 1.25” titanium compression drivers, mounted on two Hydra® plane wave generators and two waveguides. The result is smooth response to 20 kHz and excellent pattern control in both planes.

The EVS2008 8” woofer is designed for line array use to provide very low distortion and maximum intelligibility at high SPL levels. The crossover features steep 36 dB/octave slopes with equalization for very smooth response in the vocal range, extended HF, and a protection circuit for long term reliability. It includes a user definable shading capability to finely adjust the line array to the audience area.

(General Description continued on next page.)

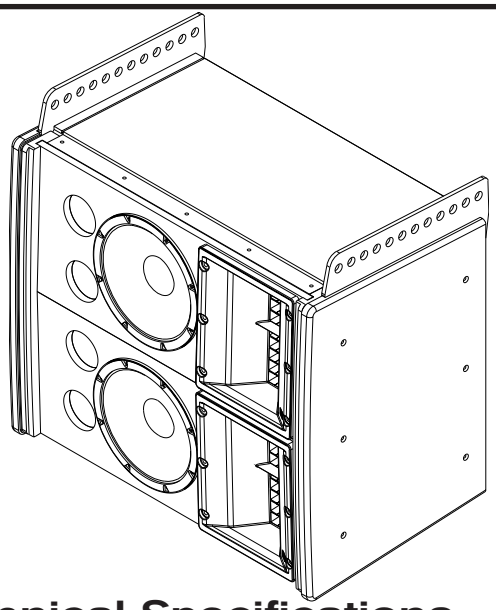

Technical Specifications:

Freq. Response[1] (-3 dB):	60 Hz - 19 kHz	
Freq. Range[1] (-10 dB):	45 Hz - 20 kHz	
Rec. Hipass Frequency:	50 Hz	
Axial Sensitivity[2]:	104 dB (1W/1m)	
Max. Calculated SPL[2]:	129 dB Continuous, 135 dB Peak	
Horizontal Coverage:	90°	
Vertical Coverage:	6°	
Power Handling:	350W Continuous, 1400W Peak	
LF Transducer:	(2) EVS2008, 8 in (203mm) Driver	
HF Transducer:	(4) DH2005, 1.25 in (32mm) Diaphragm Compression Driver	
Crossover Frequency:	1740 Hz	
Nominal Impedance:	16 Ohms	
Minimum Impedance:	12 Ohms	
Connectors:	(2) 4 Contact 10 AWG Phoenix/ EuroBlock Style Screw Terminals	PI Version - Gland Nut with Included Input Panel Cover
Enclosure Material:	Plywood with EVCoat™	
Grille:	16 GA Galvanneal, Powder-coated	PI Version - Stainless Steel with Hydrophobic Cloth
Suspension:	EVA Grid (Sold Separately)	
Environmental:	IEC 60529 IP55 for PI and FG versions	
Dimensions (H x W x D):	20.25” x 23.50” x 14.10” (514.4mm x 596.9mm x 358.2mm)	
Net Weight:	79.1 lbs (35.9 kg)	
Shipping Weight:	89.4 lbs (40.5 kg)	

[1] Full Space Measurement.
[2] Full Space Measurement of 3 Elements. SPL Adjusted for 1m Distance.

EVA-2082S/906 Line Array Module

General Description (cont'):

The enclosure is constructed of wood, reinforced with internal steel rigging straps, and coated with EVCoat™ for durability and professional appearance, or fiberglass for severe exposure. PI and FG versions include gland nut input panel and stainless steel 3-layer grille. Enclosure side panel covers conceal all suspension hardware. The unique acoustic and integrated rigging design allows for an 8 module vertical array to be built using a combination of modules from the entire EVA Series. With multiple vertical and horizontal coverage angles to choose from, you have the tools to maximize flexibility of system design, no matter what the application or budget. The innovative input panel provides a choice of phoenix-style connectors (included in all standard models), optional cover plate with dual NL4 type connectors or a gland nut plate for use with cable. The input panel also includes a provision for adding up to 9 dB of attenuation (in -3 dB steps) to an individual module as a user-installed option.

The innovative EVA Series has been designed to be used with a single amplifier channel per array (up to 8 elements/4 modules per array at 4 ohm load impedance), giving you the ability to have a powerful, compact and extremely efficient vertical array system.

Beamwidth:

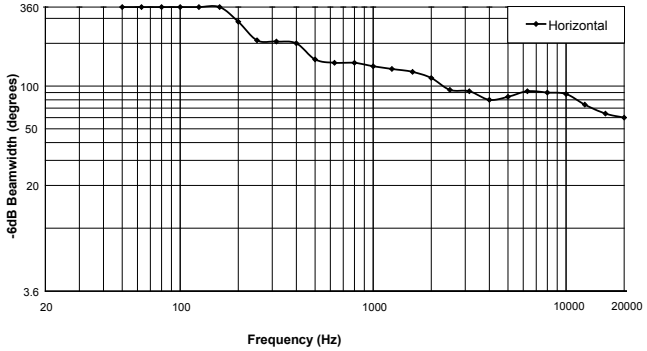

Frequency Response & Impedance:

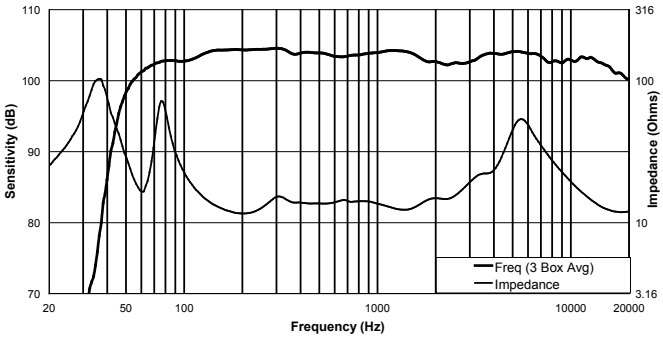

Horizontal Off Axis Frequency Response:

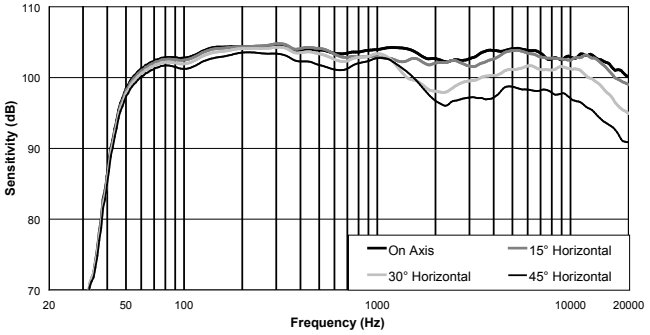

Block Diagram:

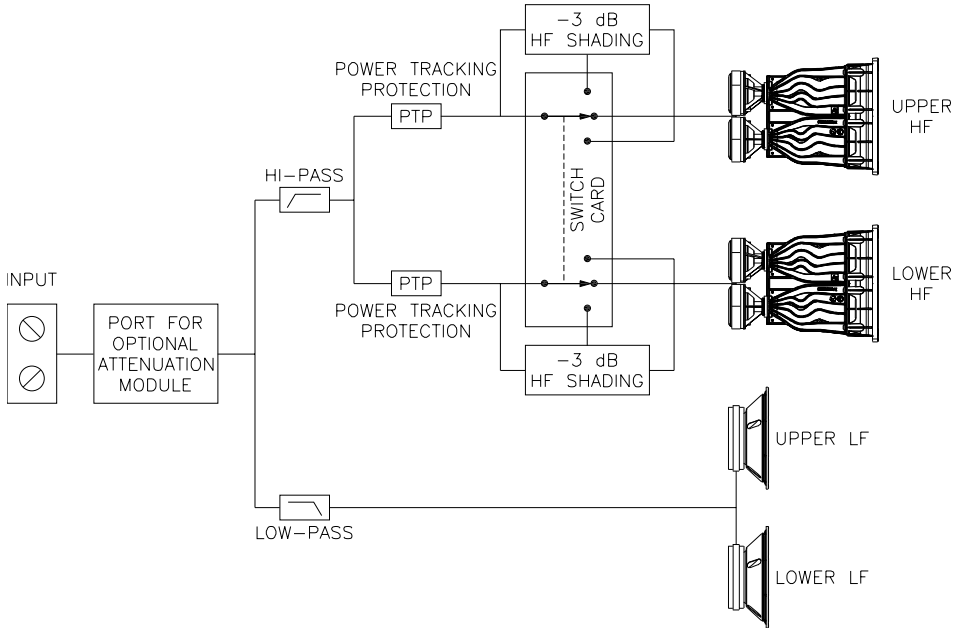

Polar Plots (1/3 Octave):

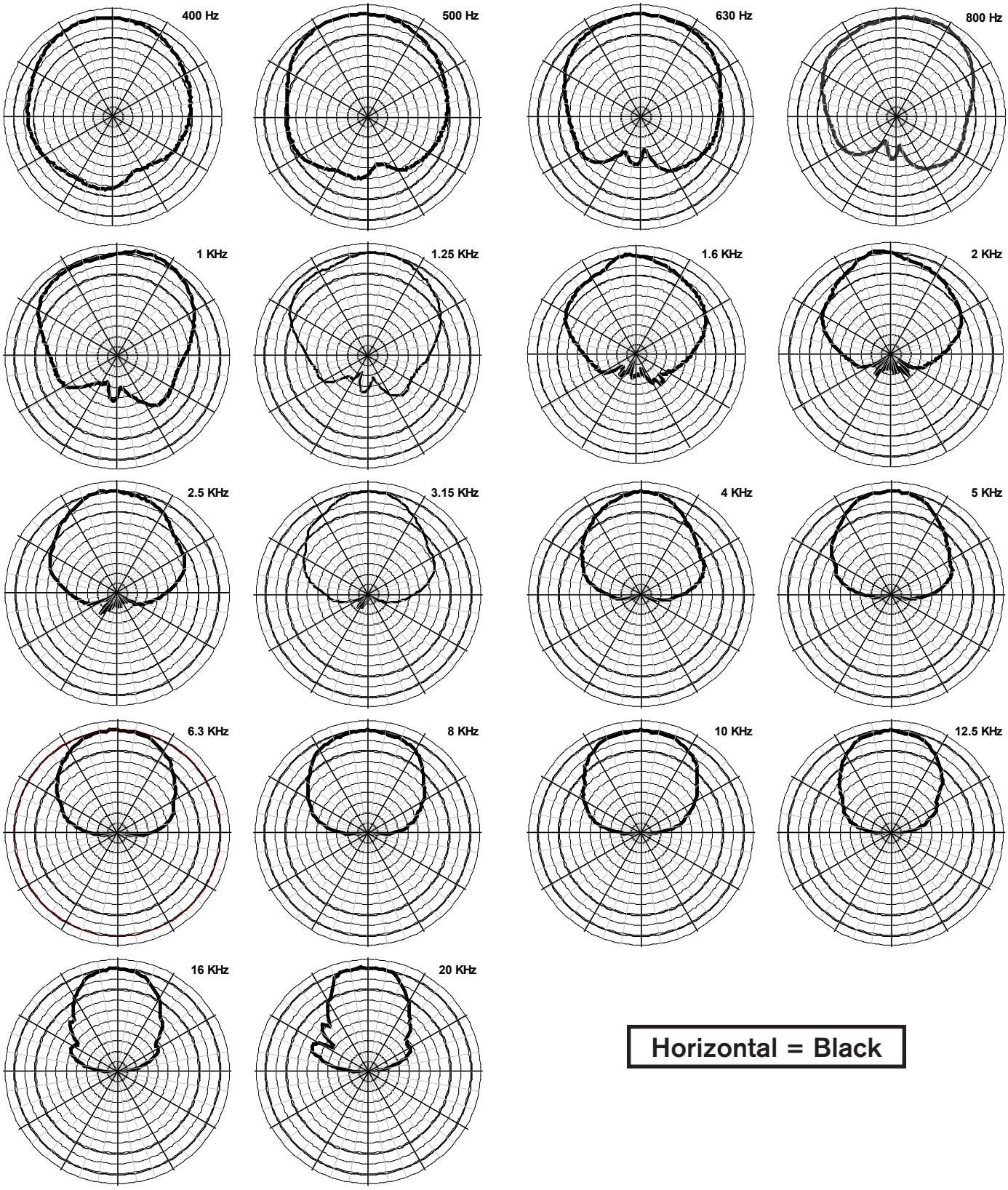

Horizontal = Black

Dimension Drawings:

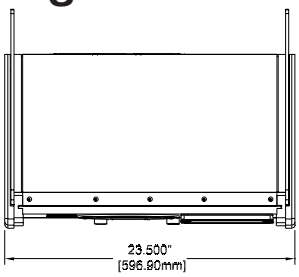

Top View

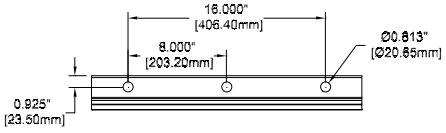

Spreader Bar
Attach Holes

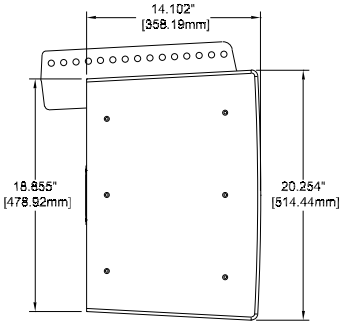

Left View

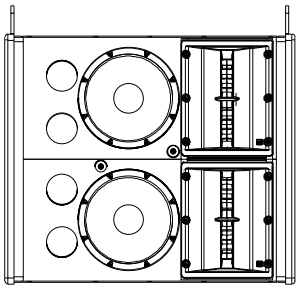

Front View

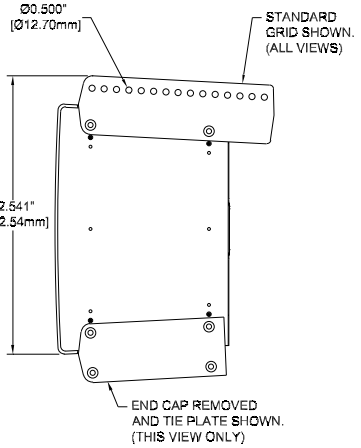

Right View

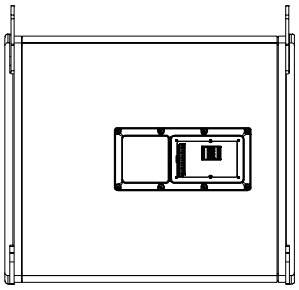

Rear View

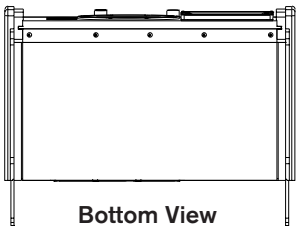

Bottom View

EVA-2082S/906 Part Numbers

- **PRD000194-001** EVA-2082S/906-BLK, 90° x 6°, Black Finish
- **PRD000194-002** EVA-2082S/906-WHT, 90° x 6°, White Finish
- **PRD000194-003** EVA-2082S/906-PIB, 90° x 6°, Black Finish, Weather Resistant
- **PRD000194-004** EVA-2082S/906-PIW, 90° x 6°, White Finish, Weather Resistant
- **PRD000194-005** EVA-2082S/906-FGB, 90° x 6°, Black Finish, Weather Resistant Fiberglass
- **PRD000194-006** EVA-2082S/906-FGW, 90° x 6°, White Finish, Weather Resistant Fiberglass

⚠ CAUTION ⚠

This EVA Loudspeaker should be suspended overhead only in accordance with the procedures and limitations specified in the *EVA User Manual* and possible manual update notices. This system should be suspended with certified rigging hardware by an authorized rigging professional and in compliance with local, state, and federal overhead suspension ordinances.

Performance Match

- **PRD000195** EVA-2082S/920, 90° x 20° Coverage
- **PRD000196** EVA-2082S/126, 120° x 6° Coverage
- **PRD000197** EVA-2082S/1220, 120° x 20° Coverage
- **F.01U.076.843** CPS2.9, 120V Power Amplifier, 2 x 900W
- **F.01U.076.844** CPS2.12, 120V Power Amplifier, 2 x 1200W
- **D170466** CPS4.10, 120V Power Amplifier, 4 x 1000W

Accessories

- **ACC000082-001** EVA-SG-BLK, EVA Standard Grid (Black)
- **ACC000082-002** EVA-SG-WHT, EVA Standard Grid (White)
- **ACC000083-001** EVA-EG-BLK, EVA Extended Grid (Black)
- **ACC000083-002** EVA-EG-WHT, EVA Extended Grid (White)
- **ACC000079-001** EVA-GXB-BLK, Grid Extra Spreader Bar (Black)
- **ACC000080-002** EVA-GXB-WHT, Grid Extra Spreader Bar (White)
- **ACC000081-000** EVA-AM, EVA Attenuation Module
- **ACC000084-000** CDNL4, Cover Plate, Dual NL4
- **ACC000085-000** CSG, Cover Plate, Single Gland Nut
- **ACC000086-000** CDG, Cover Plate, Dual Gland Nut

Electro-Voice

12000 Portland Avenue South, Burnsville, MN 55337
Phone: 952/884-4051, Fax: 952/884-0043

www.electrovoice.com

© Bosch Communications Systems 10/2010

Part Number LIT000346000 Rev C

U.S.A. and Canada only. For customer orders, contact Customer Service at:
800/392-3497 Fax: 800/955-6831
Europe, Africa, and Middle East only. For customer orders, contact Customer Service at:
+ 49 9421-706 0 Fax: + 49 9421-706 265
Other Internatonal locations. For customer orders, Contact Customer Service at:
+ 1 952 884-4051 Fax: + 1 952 887-9212
For warranty repair or service information, contact the Service Repair department at:
800/685-2606
For technical assistance, contact Technical Support at: **866/78AUDIO**

Specifications subject to change without notice.